Passion for Farming

4315012

# Digi Doser Wetfeed 100

## 4309543

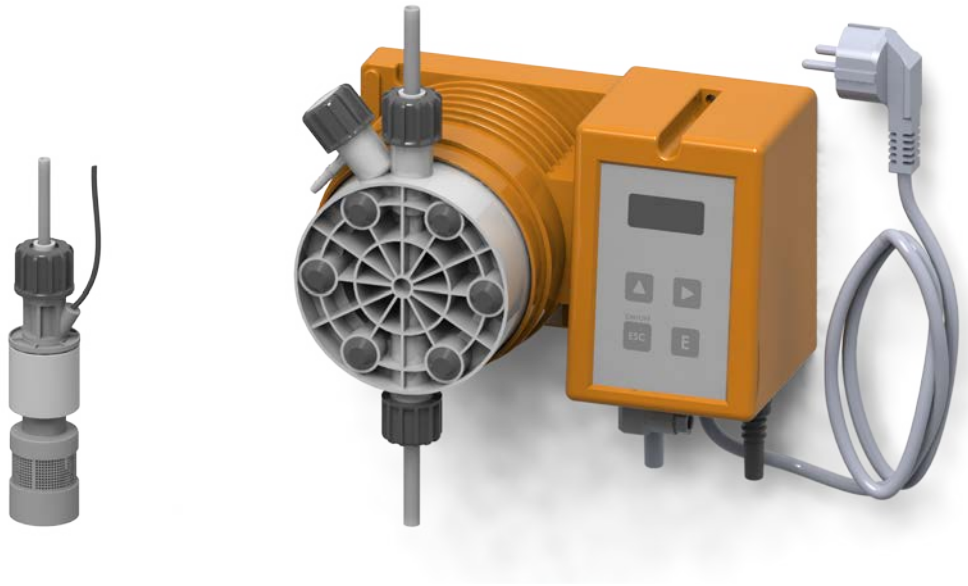

EN **Digi Doser Wetfeed 100**
Operating instructions.....3

MS Schippers

4309543/01-04-2015/F

EN

# Digi Doser Wetfeed 100

## FOREWORD

### Product description

Digi Doser Wetfeed 100 is a dosing system for adding organic acids to liquid feed. On a signal from the liquid feed computer, the digital pump can dose a set amount of acid into the feed mixer, up to a maximum of 100 litres per hour.

## TABLE OF CONTENTS


Foreword ..... 3
Product description ..... 3
Table of contents ..... 3
1. The device ..... 4
1.1 Diagram of parts ..... 4
1.2 Parts list ..... 4
1.3. Connections ..... 5
2. Technical data ..... 5
3. Settings ..... 6
3.1 Factory settings ..... 6
4.2 Modifying dosage ..... 10
4. Maintenance ..... 10
6. Trouble shooting ..... 11


**Guarantee**

- The firm Schippers guarantees this product against manufacturing defects for a period of 12 months.
- The guarantee applies to both mechanical and electronic components as well as for working hours.
- Shipments to the user are covered by the guarantee.
- Movements are at the user's risk.
- The guarantee is valid for the first owner, at the original place of installation.

**Excluded from the guarantee:**

- Damage caused by improper installation, faults in the pipeline and high water pressure or pressure surges.
- Damage caused by frost, fire, accident, unreasonable use or negligence on the part of the user.
- Damage caused by the presence of iron, water hardness, algae, organic matter or other substances in the water for which the appliance is not suitable. In some cases, water treatment should be provided.

# 1. THE DEVICE

## 1.1 Diagram of parts

The image below is an exploded diagram of the device's parts.

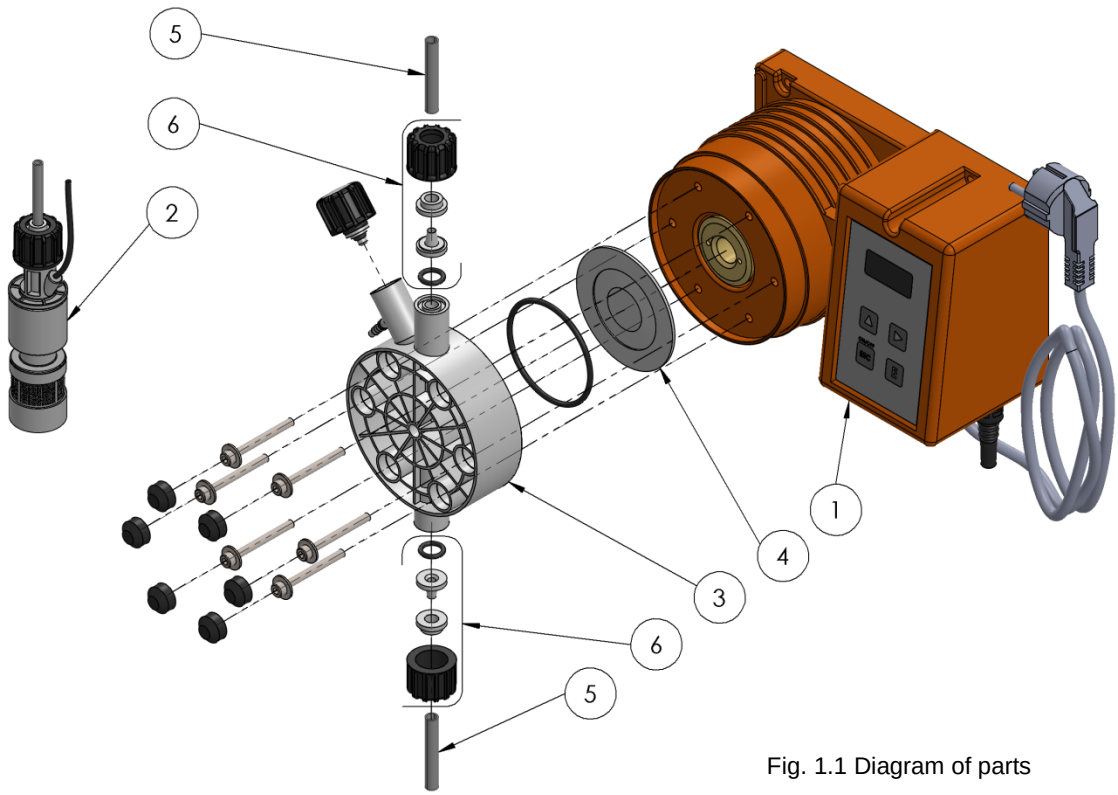


Fig. 1.1 Diagram of parts

## 1.2 Parts list

The parts list below relates to the diagram of parts in paragraph 1.1.

| Digi Doser Wetfeed 100 Spare Parts | | |
|---|---|---|
| **Code** | **Article number:** | **Description** |
| 1 | 8800416 | Wetfeed pump, 100 litres, 0 bar |
| 2 | 8804577 | Dry run protection, Wetfeed, 1/2" 12 x 18 |
| 3 | 8804587 | Pump head T, Digi Doser Wetfeed |
| 4 | 8804583 | Diaphragm T |
| 5 | 8804597 | Suction/Pressure hose 10 m 12 x 18, Digi Doser |
| 6 | 8804591 | Hose fitting kit 3/4" 12 x 18 Wetfeed |
| - | 8804599 | Fuse 1 A |

Fig. 1.2 Parts list

## 1.3. Connections

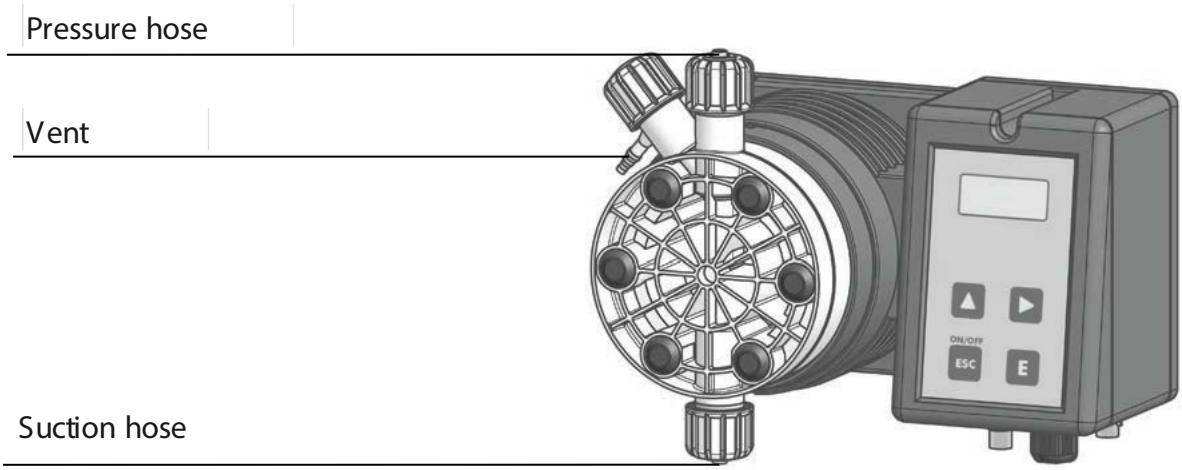


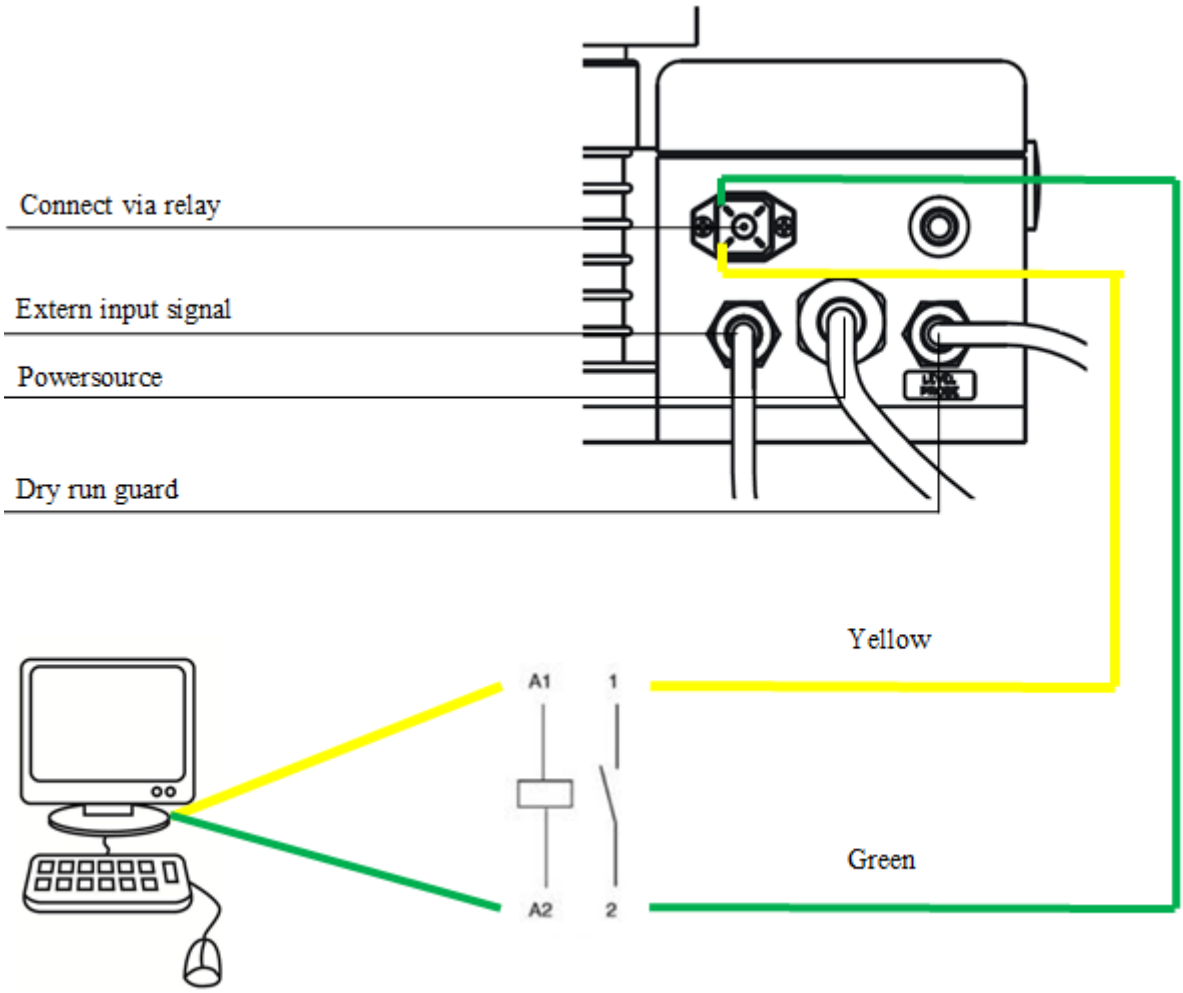

## 2. TECHNICAL DATA

| | |
|---|---|
| Max pressure | : 0 bar |
| Maximum injections per minute | : 120 |
| Injections per impulse | : 14.0 cc at 0 bar |
| Pump output | : 100 litres per hour at 0 bar |
| Working temperature | : from 0 to 45 °C. |
| Voltage | : 230 VAC |
| Power use | : 27 W |
| Dimension (mm) | : 223 mm x (H) 273 mm x (D) 160 mm |
| Weight | : ± 6 kg |
| Protection rating | : IP 65 |

## 3. SETTINGS

### 3.1 Factory settings

The following settings are pre-set in your dosage pump:

| | |
|---|---|
| CC/ST (cc per impulse) | : 14.00 cc |
| TEST | : 100 impulses |
| LEVEL (reserve in the supply tank) | : 04.000 litres |
| PASSWORD (short menu) | : 0000 |
| PASSWORD (full menu) | : 1000 |
| MODE (1) | : CONSTANT |
| SPM (Strokes per minute) | : 100 |
| STAND BY | : N.C. |

# Diagram 1

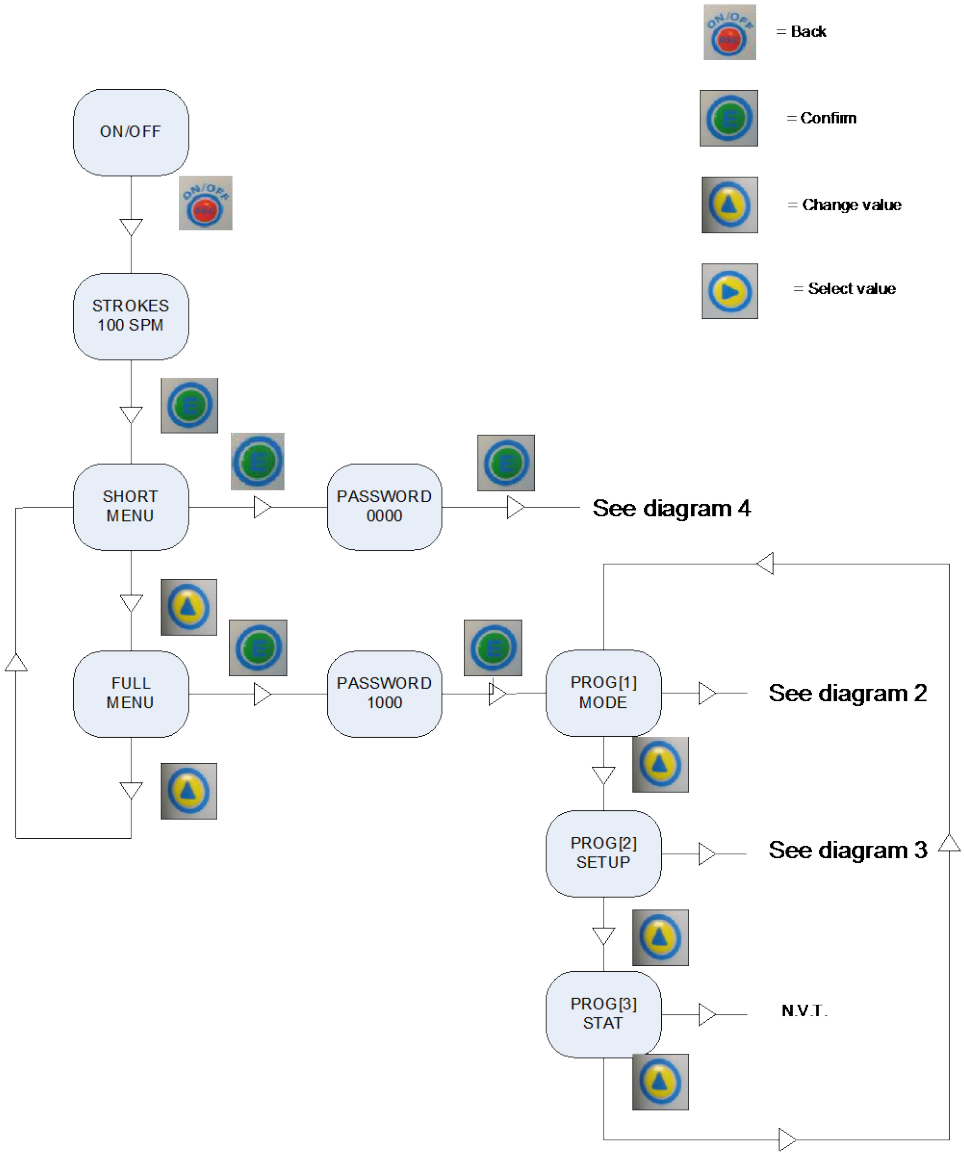
= Back
= Confirm
= Change value
= Select value
ON/OFF
STROKES
100 SPM
SHORT
MENU
PASSWORD
0000
See diagram 4
FULL
MENU
PASSWORD
1000
PROG[1]
MODE
See diagram 2
PROG[2]
SETUP
See diagram 3
PROG[3]
STAT
N.V.T.

# Diagram 2

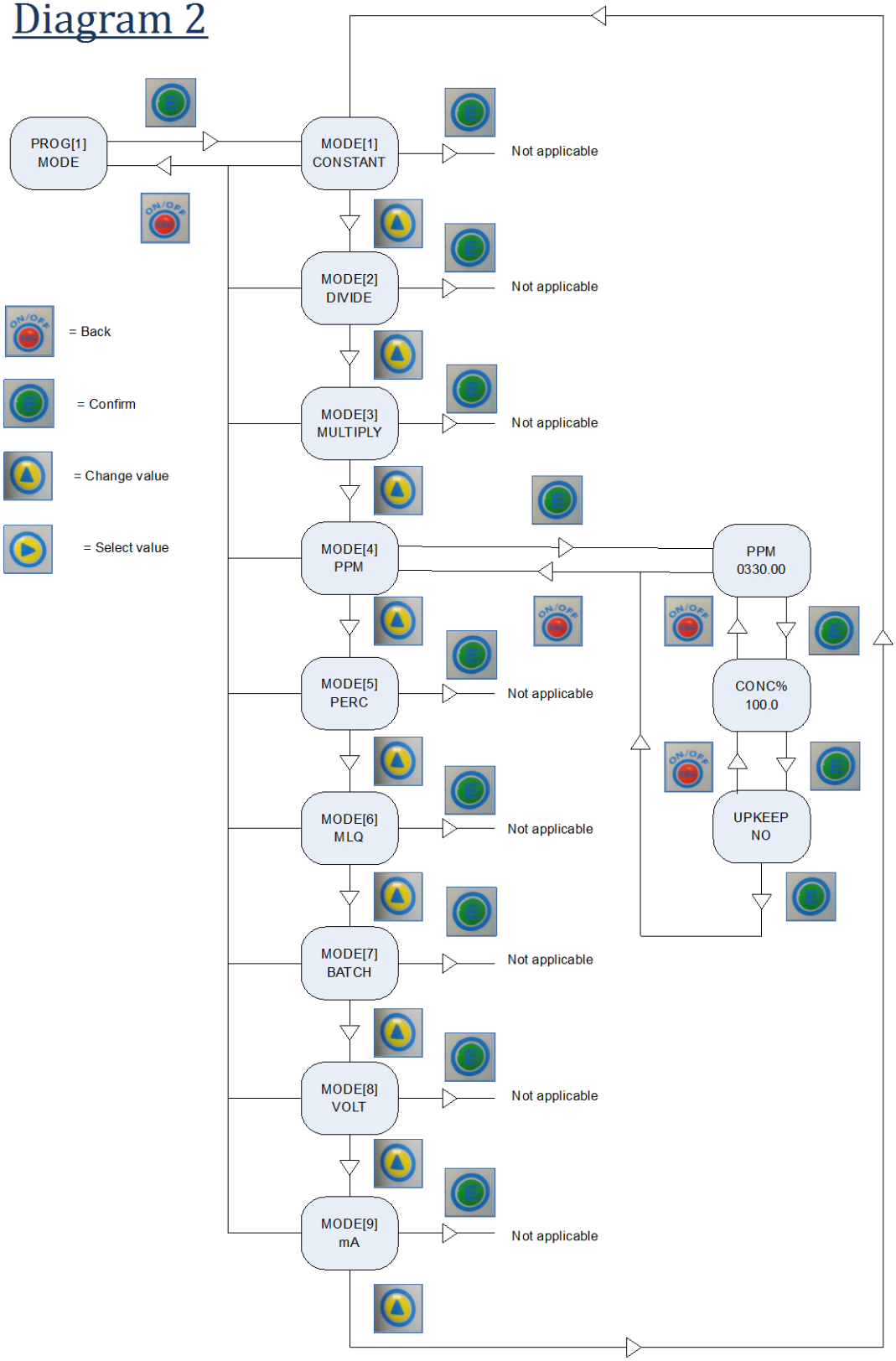
PROG[1]
MODE
MODE[1]
CONSTANT
Not applicable
MODE[2]
DIVIDE
Not applicable
MODE[3]
MULTIPLY
Not applicable
MODE[4]
PPM
PPM
0330.00
CONC%
100.0
UPKEEP
NO
MODE[5]
PERC
Not applicable
MODE[6]
MLQ
Not applicable
MODE[7]
BATCH
Not applicable
MODE[8]
VOLT
Not applicable
MODE[9]
mA
Not applicable
= Back
= Confirm
= Change value
= Select value

# Diagram 3

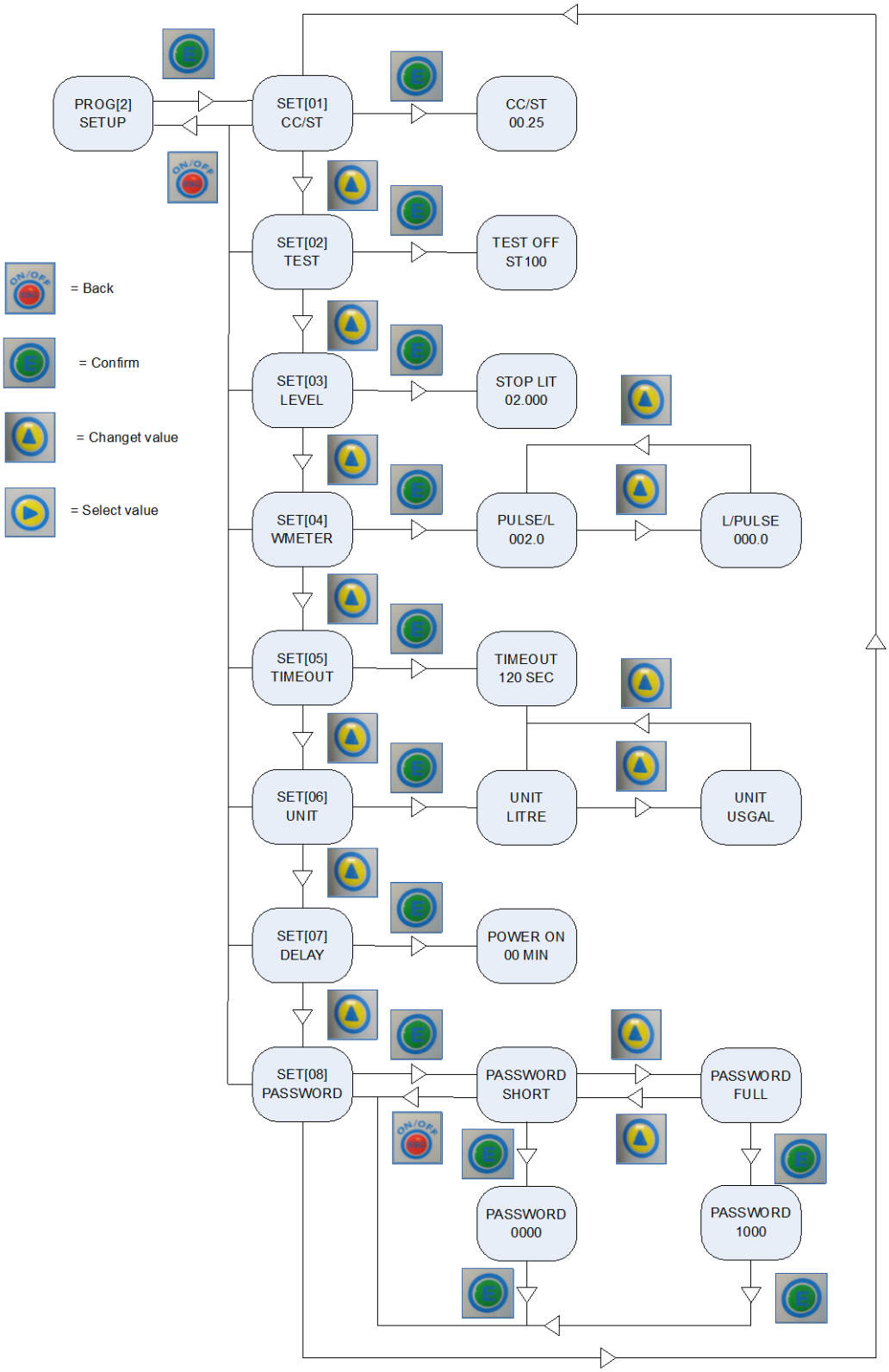
PROG[2]
SETUP
SET[01]
CC/ST
CC/ST
00.25
SET[02]
TEST
TEST OFF
ST100
SET[03]
LEVEL
STOP LIT
02.000
SET[04]
WMETER
PULSE/L
002.0
L/PULSE
000.0
SET[05]
TIMEOUT
TIMEOUT
120 SEC
SET[06]
UNIT
UNIT
LITRE
UNIT
USGAL
SET[07]
DELAY
POWER ON
00 MIN
SET[08]
PASSWORD
PASSWORD
SHORT
PASSWORD
FULL
PASSWORD
0000
PASSWORD
1000
= Back
= Confirm
= Changet value
= Select value

## 4.2 Modifying dosage

Follow the steps below to modify dosage:

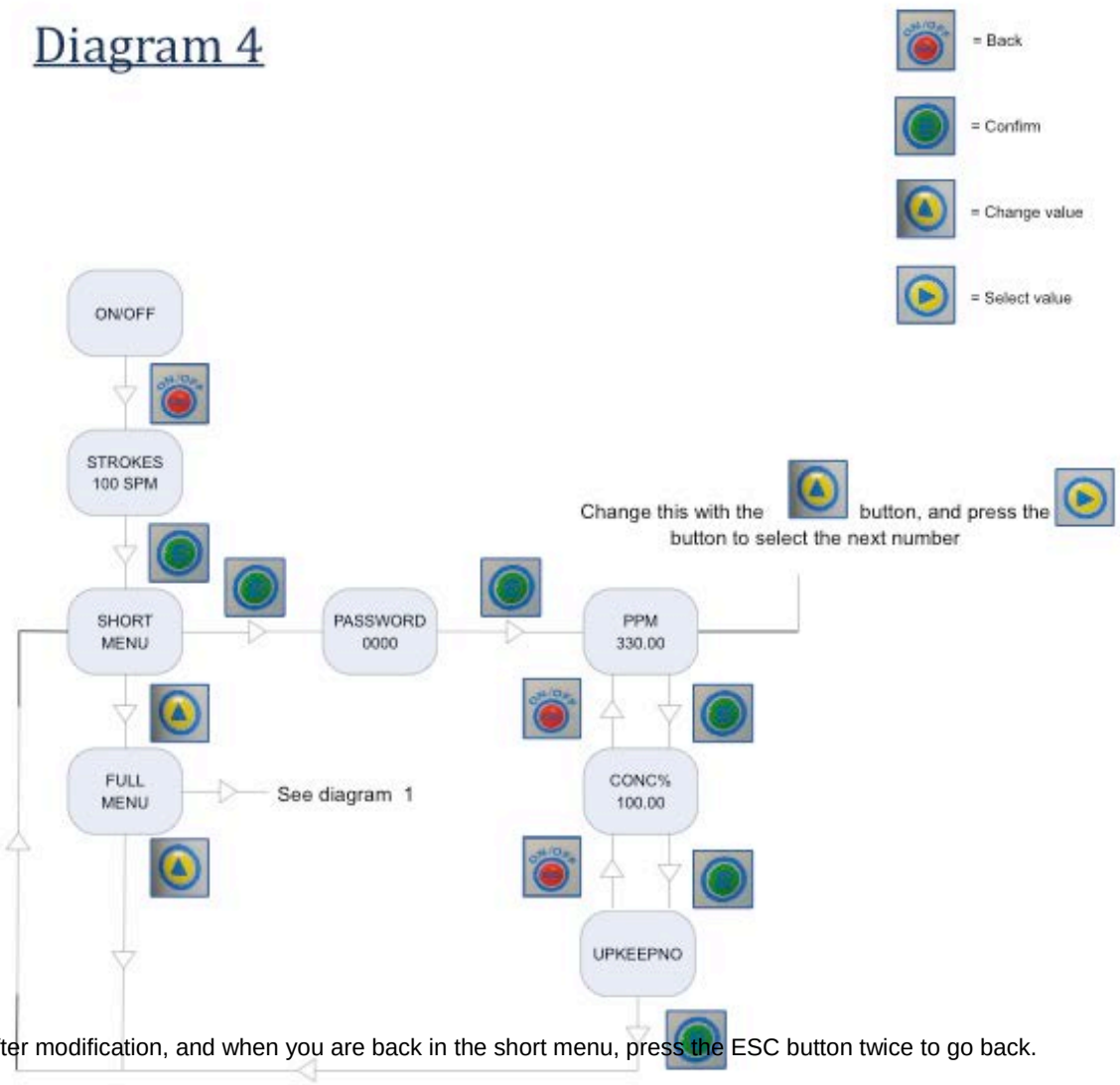


After modification, and when you are back in the short menu, press the ESC button twice to go back.

## 4. MAINTENANCE

When the pump has been idle for an extended period, we advise flushing the device by sucking up a few litres of clean water.

## 6. TROUBLE SHOOTING

| PROBLEM | CAUSE | SOLUTION |
|---|---|---|
| Fault handling | General | Press ⓘ until "alarm" shows in the display. Then press ➲ to see notification of the fault in question. |
| Dosage is not accurate | Wrong setting | Check the percentage or PPM, concentration and number of water meter pulses |
| | Excessive pressure | Set the pressure to Max. 1.5 bar while water is removed by the pressure reducing valve |
| | Foot filter blocked or defective | Clean or replace the foot filter |
| | Pump head valves, foot filter or injector blocked or damaged. | Replace or clean the defective or dirty parts |
| | Electromagnet not delivering sufficient power<br>(dull sound) | Send the pump to the repair service |
| Dosage too high | Injector<br>Wrong injector mounted<br>Defective injector | Check the injector<br>There must not a number 5 on it |
| Product/water drains back into the supply tank | Defective/dirty injector or valve | Replace/clean the injector and/or the valves |
| | Checking the injector | Screw the pressure hose off, and if water leaks from the injector, replace it<br>Or<br>Screw the pressure hose off.<br>Let the pump dose.<br>Seal the pressure hose with your thumb.<br>If the injector remains blocked with enough pressure, → replace it. |
| The water meter is running and no product is dosed | Carry out the following test:<br>Disconnect the water meter cable from the pump and connect the dry-run protection cable to it. Take the foot valve out of the supply tank and move the float up and down. | The pump should now inject with the movements of the float.<br>If it does not, you should send the pump in for repair.<br>If it does work, you need to replace the water meter's sensor, cable or the whole meter. |
| Strange symbols show on the display or certain pump functions are no longer accessible through the buttons | Fault on the printed circuit | Reset.<br>Switch off the pump with the "ESC" button.<br>Take the plug out of the power outlet.<br>Press both arrow buttons and hold them down while reconnecting the power plug.<br>The screen shows "load default"<br>Reprogram the pump.<br>If this does not succeed, you should send the pump in for repair. |
| Display/pump does not work | Power supply interrupted | Check the power supply |
| | Faulty fuse | Screw off the cover on the back of the pump and check/replace the fuse. If the problem recurs, send the pump in for repair |
| | Defective printed circuit | Send the pump to the repair service |
| Alarm<br>"low level in the tank"<br># flashing (➔alarm 1 level) | To pump the tank completely empty, a certain number of reserve litres are programmed.<br>The pump keeps on working until this reserve is gone. | Possibly modify the reserve setting for the supply tank. |
| Pump doses continuously | Press ⓘ and read the mode from the display | Check the settings<br>%<br>PPM<br>Continuous<br>Impulse/litre (not litre/impulse) |