CorePro LEDbulb

CorePro LEDbulb ND 8-60W A60 E27 827

LEDbulbs are compatible with existing fixtures with an E27 holder and are designed for retrofit replacement of incandescent bulbs.

Product data

General Information	
Cap base	E27 [E27]
EU RoHS compliant	Yes
Nominal lifetime (nom.)	15000 h
Switching cycle	50,000X
Technical type	8-60W

Light Technical	
Colour code	827 [CCT of 2,700 K]
Beam Angle (Nom)	200 °
Luminous flux (nom.)	806 lm
Colour designation	Warm white (WW)
Correlated Colour Temperature (Nom)	2700 K
Luminous efficacy (rated) (nom.)	100.00 lm/W
Colour consistency	<6
Color rendering index (nom.)	80
LLMF at end of nominal lifetime (nom.)	70 %

Operating and Electrical	
Input frequency	50 to 60 Hz
Power (Rated) (Nom)	8 W
Lamp current (nom.)	75 mA
Wattage equivalent	60 W
Starting time (nom.)	0.5 s
Warm-up time to 60% light (nom.)	0.5 s
Power factor (nom.)	0.5
Voltage (Nom)	220-240 V

Temperature	
T-Case maximum (nom.)	85 °C

Controls and Dimming	
Dimmable	No

Mechanical and Housing	
Bulb finish	Frosted

Approval and Application	
Energy efficiency label (EEL)	A+
Energy Consumption kWh/1000 h	8 kWh

Product Data	
Full product code	871869657755400
Order product name	CorePro LEDbulb ND 8-60W A60 E27 827
EAN/UPC – product	8718696577554
Order code	57755400
Numerator – quantity per pack	1
Numerator – packs per outer box	10
Material no. (12NC)	929001234302
Net weight (piece)	0.076 kg

CorePro LEDbulb

Dimensional drawing

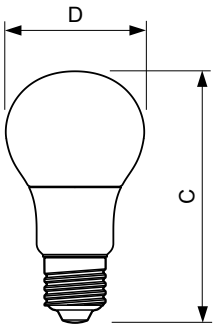

Entrybulb A60 230V 8W-60W 2700K E27 ND

Product	D	C
CorePro LEDbulb ND 8-60W A60 E27 827	60 mm	110 mm

Photometric data

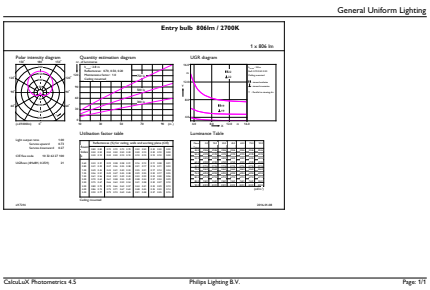

CorePro LEDbulb ND 8-60W A60

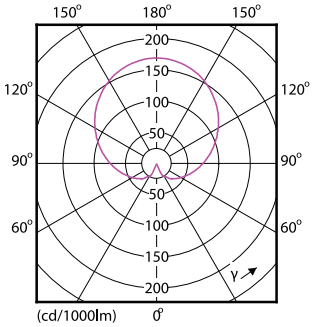

CorePro LEDbulb ND 8-60W A60

SDPO_LEDBulb_0021-Spectral Power distribution

CorePro LEDbulb

Lifetime

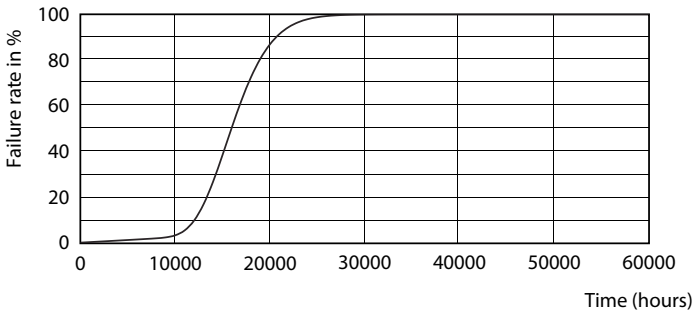

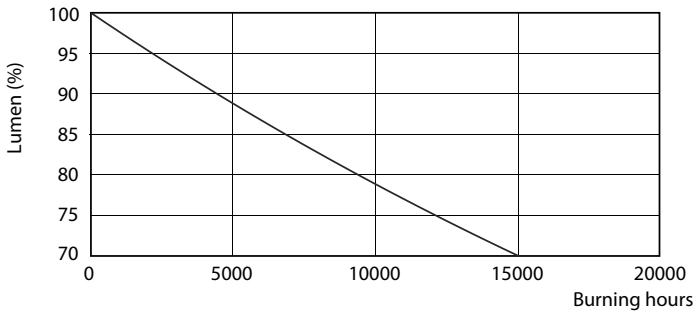

LEDbulb 40W E27 830 FR A60

LEDbulb 40W E27 830 FR A60

© 2020 Signify Holding All rights reserved. Signify does not give any representation or warranty as to the accuracy or completeness of the information included herein and shall not be liable for any action in reliance thereon. The information presented in this document is not intended as any commercial offer and does not form part of any quotation or contract, unless otherwise agreed by Signify. Philips and the Philips Shield Emblem are registered trademarks of Koninklijke Philips N.V.